Advanced Combined Charging Station

# C-Station C500 Integrated Charging System

Technical Datasheet, North America

C-Station includes the functionalities of both S-Series charging satellites and C-Series CPUs. Its heavy-duty electromechanical design includes three type of modules for control, dynamic and power. Each cabinet utilizes 1 to 4 power modules, each providing  a charging power of up to 50 kW and a maximum nominal power of up to 200 kW. This can be divided between 1 to 4 charging outputs, using static or dynamic charging power management. On static power management, each power module is dedicated to a specific charging cable, or routed to an external satellite. On dynamic power management, the charging power is routed automatically up to full power, depending of cable sizing and the number of charging outputs.

- Dynamic Charging Power Management (pat. pend.) for intelligent, adaptive and automatic charging power distribution
- Scalability with add-on power modules
- The charging power can be routed to up to 4 charging outputs
- Up to 2 external S-Series charging satellites can be connected to C-Station
- The door is equipped with a swing handle with a tumbler lock for easy & safe enclosure

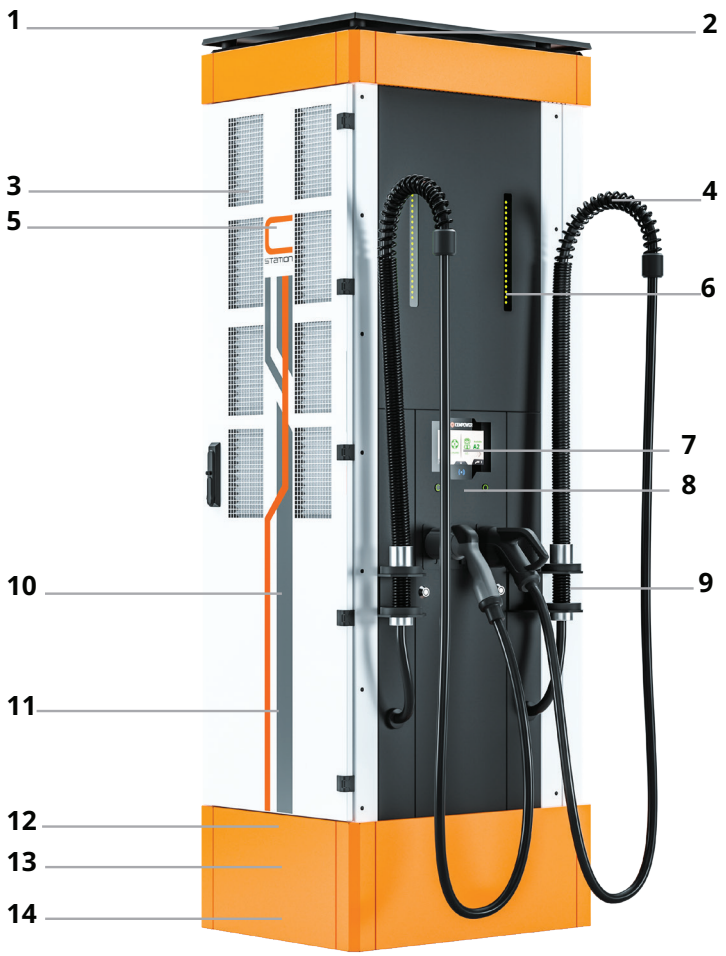


1. WiFi / cellular / GPS antenna
2. Air outlet
3. Air inlets
4. Charging cable support springs
5. Power module (1 to 4 pcs per CPU)
6. Charging status indication LEDs
7. 7" touch screen display
8. RFID reader (ISO14443A)
9. Charging cable holders
10. Static/dynamic power distribution module
11. Control module
12. Main switch
13. AC cable entry
14. DC output

## Environmental specifications

| | |
|---|---|
| Operating temperature | -22...+122˚F / -30...+50˚C (with CHAdeMO up to +104˚F / +40˚C) |
| Current derating | -1.5% of max. charging current per 1.8 °F / 1°C (above +104˚F / +40˚C) |
| Maximum altitude | 2000 m / 6562 ft |
| Altitude derating | -1.4% of max. charging current per 328 ft / 100 m (above 6562 ft / 2000 m ) |
| Storage temperature | -40...+140˚F / -40...+60˚C |
| Enclosure | Suitable for outdoor use |
| Operational noise level | < 60 dB (at 3.28 ft / 1 m distance) |
| Ambient air humidity | < 95% relative humidity |

## Compliance to standards

| | |
|---|---|
| Electrical safety | IEC 61851-1, IEC 61851-23 |
| EMC, harmonics | IEC 61851-21-2 |
| Conforms to | UL Std. 2202, 2231-2 |
| Certified to | CSA Std. C22.2 No. 281.2, C107.1 |

## Electrical protections

| |
|---|
| Over/under voltage |
| Surge protection |
| Short circuit |
| Overload protection |
| Earth leakage current |
| Device over temperature |

## Product code interpretation examples:
## C501P160UU5CSD2L
## C501P160UU7CSD2LC0

| | |
|---|---|
| C501 | C-Series 500 V single cabinet |
| P160 | Charging power<br>( P160 = 160 kW) |
| UU | Charging method<br>(UU = 2 x CCS1 |
| 5C<br>7C | Charging cable<br>5 = 16.4 ft / 5 m<br>7 = 23 ft / 7 m<br>C= 200 A nominal charging cable current |
| S | User interface<br>S = standard<br>P = card payment terminal |
| D2 | Power distribution modules |
| L | ETL approved |
| C0 | Branding option: no stickers,<br>black roof & base |

### Charging method

| | |
|---|---|
| D | CHAdeMO |
| U | CCS1 |
| UU | 2 x CCS1 |
| UD | CCS1 & CHAdeMO |

### Nominal charging cable current

| | |
|---|---|
| B | 125 A (CHAdeMO)<br>150 A (CCS1) |
| C | 200 A (CCS1) |

### Power distribution modules

| | |
|---|---|
| S4 | Up to 4 static outputs |
| D2 | Up to 2 dynamic outputs |
| D4 | Up to 4 dynamic outputs |

| Product code | No. of charging outputs & charging method | Charging cable length | Max. cont. charging current [A] at +40˚C / +104 ˚F | Charging power [kW] at 400 $V_{DC}$ |
|---|---|---|---|---|
| C501...D5B...L<br>C501...D7B...L | 1 x CHAdeMO | 16.4 ft / 5 m<br>23 ft / 7 m | 125 A | 50 kW |
| C501...U5C...L<br>C501...U7C...L | 1 x CCS1 | 16.4 ft / 5 m<br>23 ft / 7 m | 200 A | 80 kW |
| C501...UU5C...L<br>C501...UU7C...L | 2 x CCS1 | 16.4 ft / 5 m<br>23 ft / 7 m | 2 x 200 A | 2 x 80 kW |
| C501...UD5CB...L<br>C501...UD7CB...L | 1 x CCS1 &<br>1 x CHAdeMO | 16.4 ft / 5 m<br>23 ft / 7 m | 200 A &<br>125 A | 60 kW &<br>50 kW |

CCS2 UL-CSA certified charging cables available upon request, please contact Kempower for availability, pricing and delivery times.

## General electric specifications

| | |
|---|---|
| Input voltage (AC) | 400/480 $V_{AC}$ ±10% |
| Input frequency | 50...60 Hz |
| Output voltage | 200...575 $V_{DC}$ |
| Power factor (at full load) | 0.92 |
| Efficiency (at full load) | 94% |
| Idle power | 20 VA |
| Standby power | 50 W |
| Over voltage class | III |
| Icc | 35 kA |
| Network type | TN-S, TN-C, TN-C-S, TT |

## Connections

| | |
|---|---|
| WiFi | 802.11 b/g/n (2.4/5 GHz) |
| Cellular / GPS | LTE-FDD, LTE-TDD, WCDMA, GSM |
| Ethernet | RJ45, IEEE 802.3 / 802.3u |
| OCPP | 1.6 J / 2.0 |
| Connectivity | Kempower ChargEye remote maintenance and management dashboard |

## Intermittent operation, 50 kW output / power module

| Product code | Charging power ($P_{DC}$) [kW] | Max. charging current (400 $V_{DC}$) [A] | Input power [kVA] | Input current 400 $V_{AC}$ [A] | Input current 480 $V_{AC}$ [A] | Rec. grid fuse [A] |
|---|---|---|---|---|---|---|
| C801P40...L | 50 | 125 | 58 | 83 | 70 | 100 |
| C801P80...L | 100 | 250 | 116 | 167 | 139 | 200 |
| C801P120...L | 150 | 375 | 173 | 250 | 209 | 315 |
| C801P160...L | 200 | 500 | 231 | 334 | 278 | 400 |

## Continuous operation, 40 kW output / power module

| Product code | Charging power ($P_{DC}$) [kW] | Max. charging current (400 $V_{DC}$) [A] | Input power [kVA] | Input current 400 $V_{AC}$ [A] | Input current 480 $V_{AC}$ [A] | Rec. grid fuse [A] |
|---|---|---|---|---|---|---|
| C801P40...L | 40 | 100 | 46 | 67 | 56 | 100 |
| C801P80...L | 80 | 200 | 93 | 134 | 111 | 200 |
| C801P120...L | 120 | 300 | 139 | 200 | 167 | 250 |
| C801P160...L | 160 | 400 | 185 | 267 | 223 | 315 |

- Notice: Over 500 A requires at least two charging outputs
- The charging power in the intermittent operation table are available for 30 minutes, at +40°C / +105°F ambient temperature
- After this, the maximum output power is dropped to the continuous operation level
- The duration of intermittent charging power depends on the ambient temperature; as the temperature increases, the duration of intermittent charging power gets shorter
- In continuous operation, the charging power is available continuously within the specified (max. +40°C / +104°F) ambient temperature
- At higher ambient temperatures, current derating is applied according to table above
- Fuses recommendation applies only for continuous operation

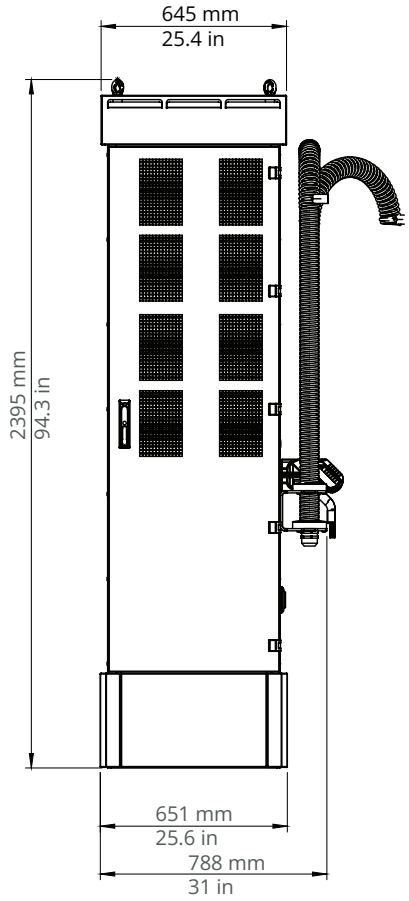


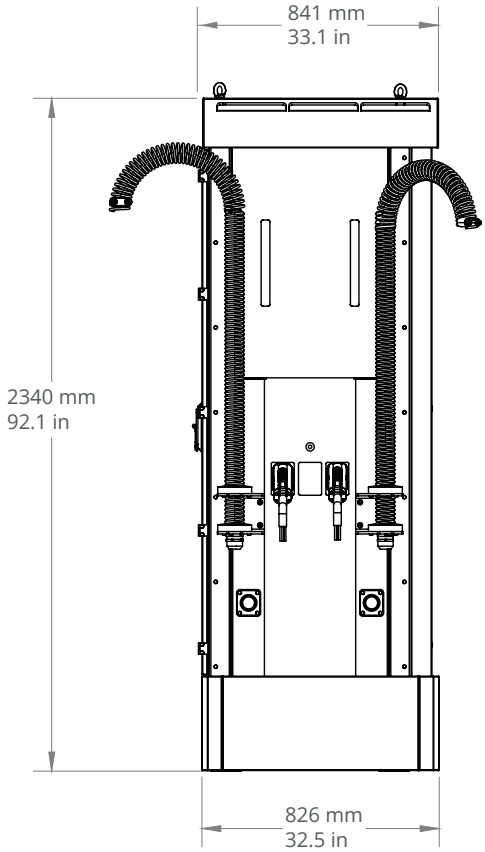


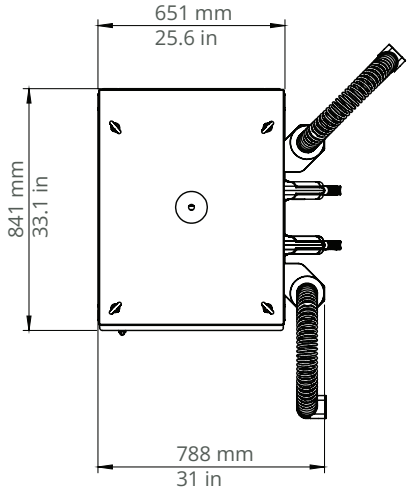


## Mechanical dimensions (WxHxD, footprint)

25.6 x 92.1 x 33.1 in / 651 x 2395 x 841 mm

## Weight

| | | |
|---|---|---|
| C501P40...L | 618 lbs | 280 kg |
| C501P80...L | 706 lbs | 320 kg |
| C501P120...L | 793 lbs | 360 kg |
| C501P160...L | 881 lbs | 400 kg |

## Options

| | |
|---|---|
| Customized branding (colors, stickers) | Consult your sales representative at Kempower for customer branding options (colors, stickers), pricing and MOQ |

Warning: Never release the charging cable from your hands when moving it to or from the vehicle, in order to prevent damaging the plug or the vehicle. After charging, always place the plug back in its holder. Refer to the operating manual for warnings, functions and features.

Intertek